1868303COM(1868335COM 1868412COM 1868885COM)
CARSON FIREPLACE TV STAND

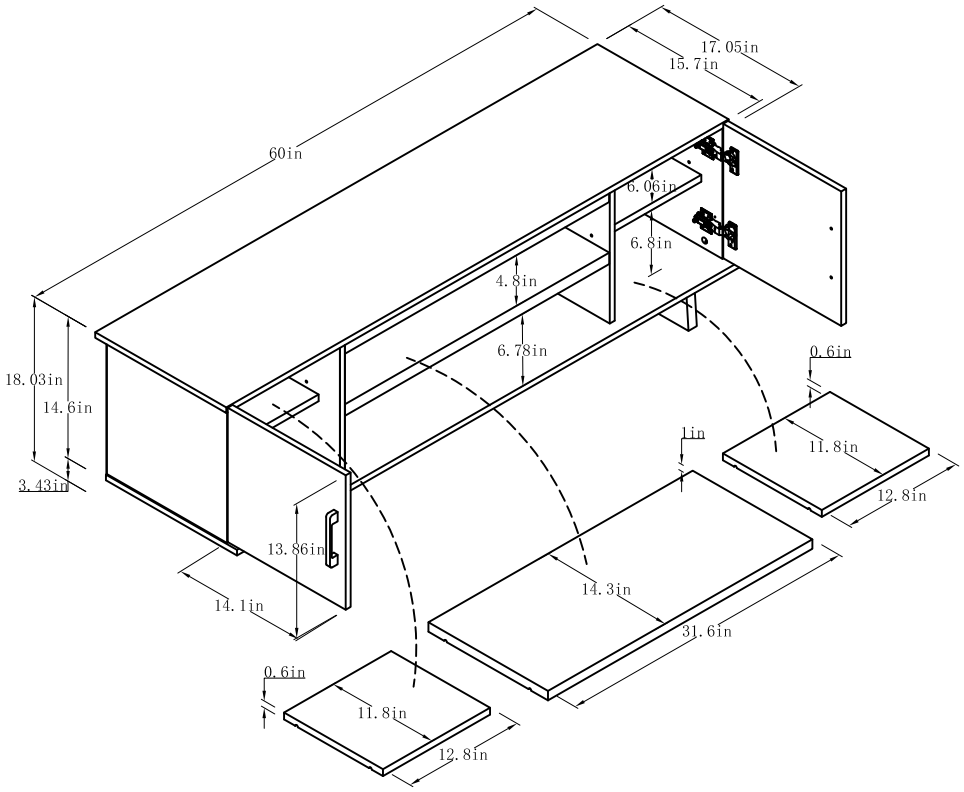

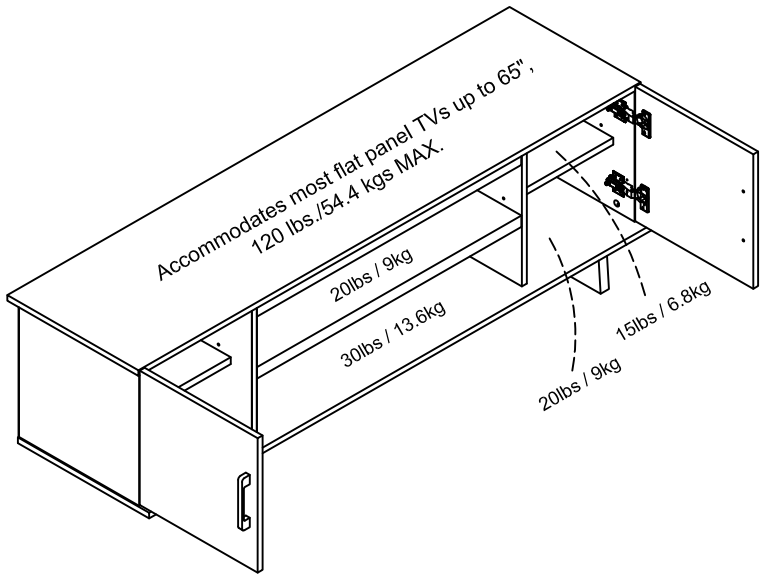

Wood Breakdown:
MDF 0%, PB 96%.
Total storage: 5.61 cubic feet

Overall Product Size:
60" W × 17.05 D × 18.03" H
152.4 W × 43.3cm D ×45.8cm H

Maximum Weight Capacities
Unit Weight:62.04 lbs. (28.2kg)